# Product information sheet LARESSA-F Lever right

Item no. 521545

## Benefits



- Modern mixer tap for installation in front of the window
- User-friendly fold-down mechanism so the mixer tap folds down to one side
- Buffered fold-down process and secure fit
- Tap dimensions allowthe spout to fit inside the bowl
- Control lever on side, choice of left or right side
- High spout for easy filling of pans and vases
- Minimum clearance between sink and window sash 6.5 cm

## Colours



brass chrome

Available colours:
chrome

## Planning information

- *Minimum clearance between sink and window sash 6.5 cm.

## Scope of supply

- 360° swivel spout for greater reach
- Ø 35 mm tap hole required
- With ceramic disk cartridge
- Patented jet regulator for markedly reduced scaling
- Flexible connector pipes, 500 mm long and ⅜'' nut
- Stabilisation plate to increase the stability of the tap when fitted in stainless steel sinks

## Details

| | |
|---|---|
| Flow rate | 11.83 l |
| Swivel range | 360 ° |

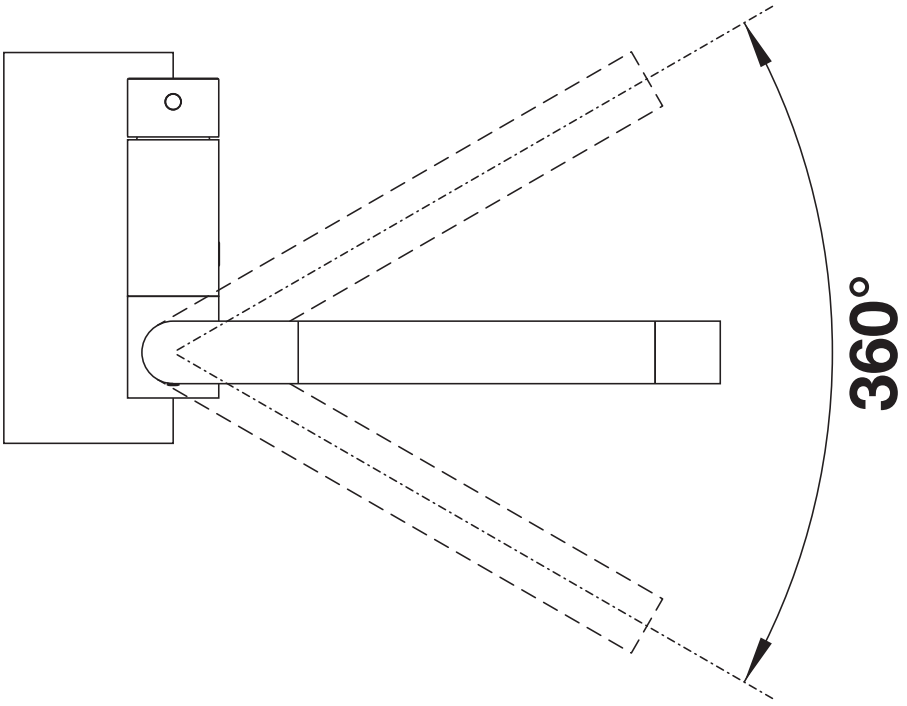


Swivel range

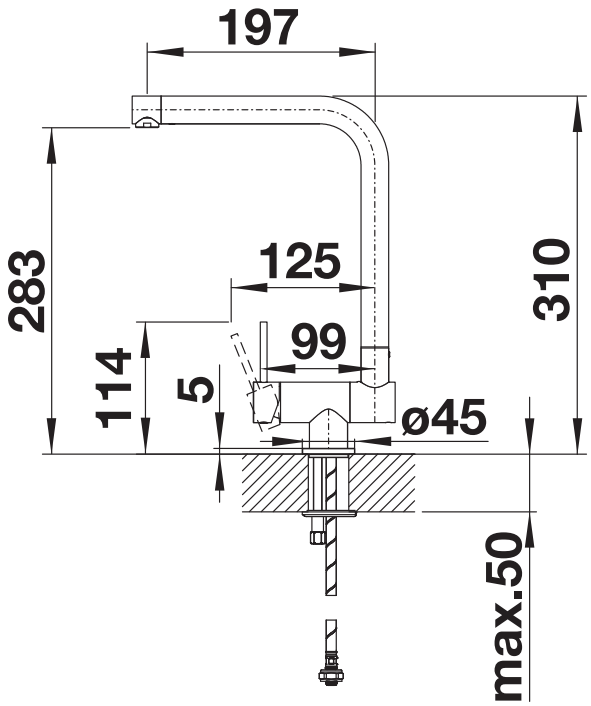


Side view

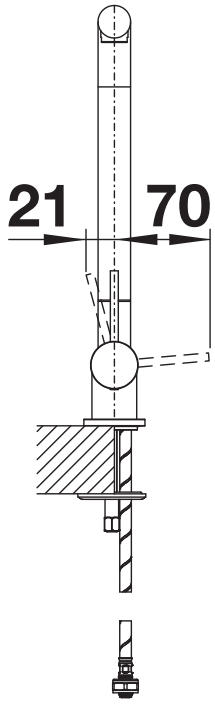


Side view lever